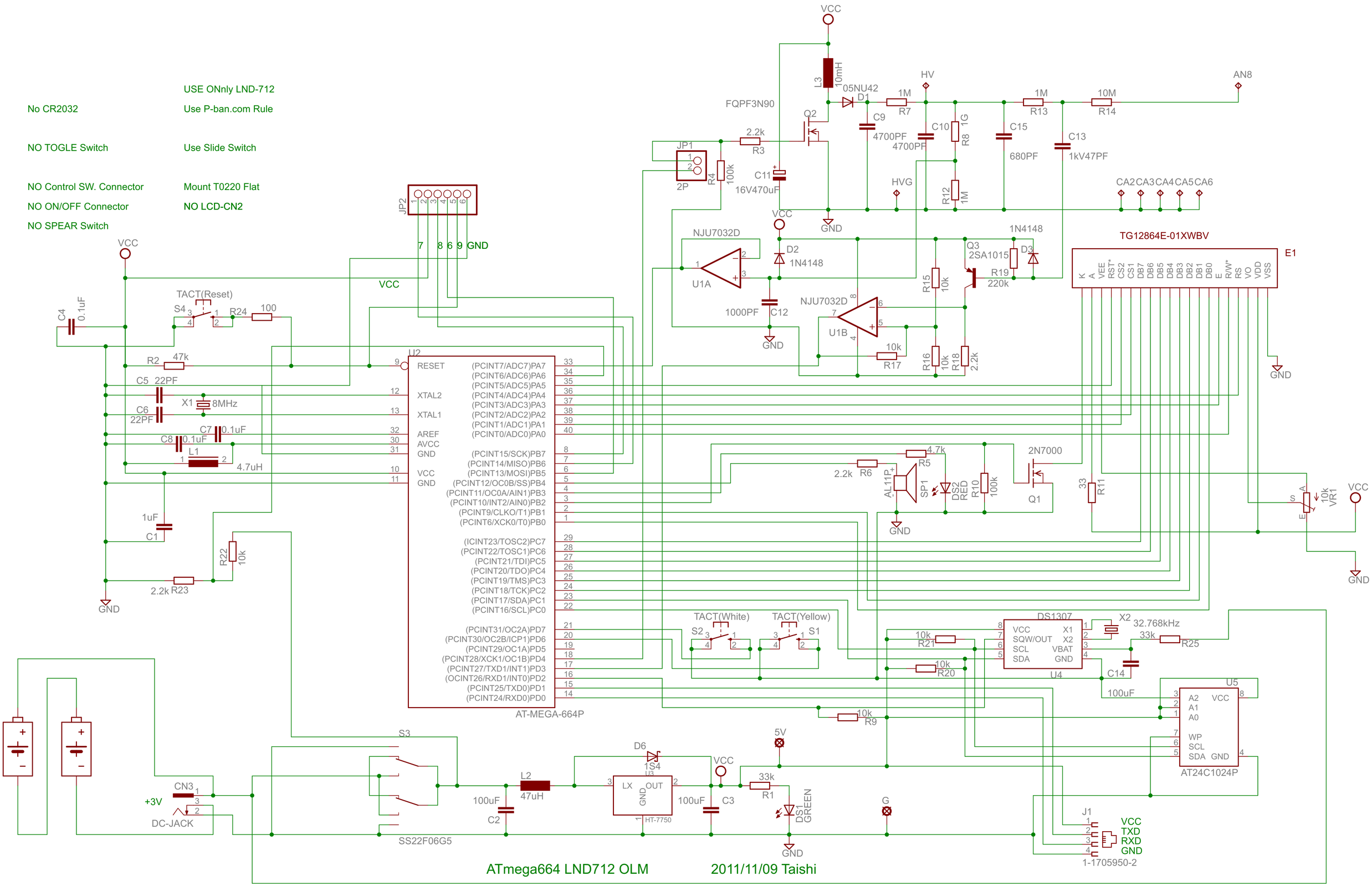
USE ONnly LND-712
No CR2032
Use P-ban.com Rule
NO TOGLE Switch
Use Slide Switch
NO Control SW. Connector
Mount T0220 Flat
NO ON/OFF Connector
NO LCD-CN2
NO SPEAR Switch
VCC
GND
HV
HVG
AN8
CA2 CA3 CA4 CA5 CA6
JP2
7 8 6 9 GND
TACT(Reset)
S4
R24 100
C4 0.1uF
R2 47k
C5 22PF
C6 22PF
X1 8MHz
C7 0.1uF
C8 0.1uF
L1 4.7uH
1uF C1
R22 10k
2.2k R23
U2
RESET
XTAL2
XTAL1
AREF
AVCC
GND
VCC
GND
(PCINT7/ADC7)PA7
(PCINT6/ADC6)PA6
(PCINT5/ADC5)PA5
(PCINT4/ADC4)PA4
(PCINT3/ADC3)PA3
(PCINT2/ADC2)PA2
(PCINT1/ADC1)PA1
(PCINT0/ADC0)PA0
(PCINT15/SCK)PB7
(PCINT14/MISO)PB6
(PCINT13/MOSI)PB5
(PCINT12/OC0B/SS)PB4
(PCINT11/OC0A/AIN1)PB3
(PCINT10/INT2/AIN0)PB2
(PCINT9/CLKO/T1)PB1
(PCINT6/XCK0/T0)PB0
(ICINT23/TOSC2)PC7
(PCINT22/TOSC1)PC6
(PCINT21/TDI)PC5
(PCINT20/TDO)PC4
(PCINT19/TMS)PC3
(PCINT18/TCK)PC2
(PCINT17/SDA)PC1
(PCINT16/SCL)PC0
(PCINT31/OC2A)PD7
(PCINT30/OC2B/ICP1)PD6
(PCINT29/OC1A)PD5
(PCINT28/XCK1/OC1B)PD4
(PCINT27/TXD1/INT1)PD3
(OCINT26/RXD1/INT0)PD2
(PCINT25/TXD0)PD1
(PCINT24/RXD0)PD0
AT-MEGA-664P
TACT(White) S2
TACT(Yellow) S1
S3
SS22F06G5
CN3
+3V
DC-JACK
L2 47uH
100uF C2
D6 1S4
U3 HT-7750
LX GND OUT
100uF C3
5V
33k R1
DS1 GREEN
G
J1
VCC
TXD
RXD
GND
1-1705950-2
DS1307
VCC SQW/OUT SCL SDA
X1 X2 VBAT GND
U4
X2 32.768kHz
33k R25
C14 100uF
10k R21
10k R20
10k R9
U5
A2 A1 A0 WP SCL SDA
VCC GND
AT24C1024P
L3 10mH
05NU42 D1
FQPF3N90 Q2
2.2k R3
JP1 2P
R4 100k
C11 16V470uF
C9 4700PF
1M R7
C10 4700PF
R8 1G
R12 1M
C15 680PF
1M R13
C13 1kV47PF
10M R14
NJU7032D U1A
D2 1N4148
1000PF C12
NJU7032D U1B
R15 10k
R16 10k
R17 10k
R18 2.2k
Q3 2SA1015
R19 220k
1N4148 D3
TG12864E-01XWBV
E1
K A VEE RST* CS2 CS1 DB7 DB6 DB5 DB4 DB3 DB2 DB1 DB0 E R/W* RS VO VDD VSS
4.7k R5
2.2k R6
AL11P SP1
DS2 RED
R10 100k
2N7000 Q1
33 R11
10k VR1
ATmega664 LND712 OLM
2011/11/09 Taishi