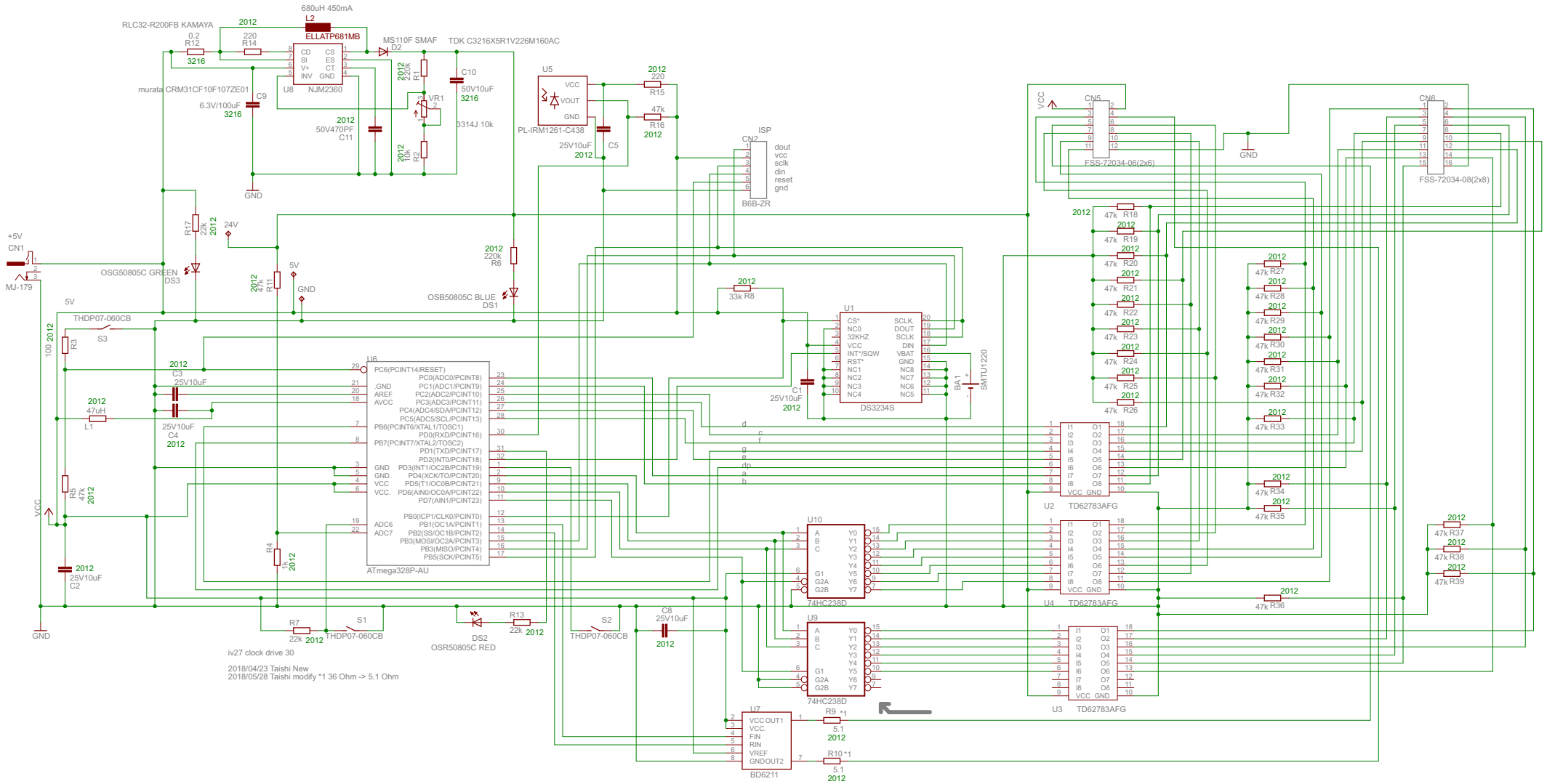
680uH 450mA
L2
ELLATP681MB
RLC32-R200FB KAMAYA
MS110F SMAF
D2
TDK C3216X5R1V226M160AC
U8 NJM2360
murata CRM31CF10F107ZE01
6.3V/100uF
50V470PF
C11
50V10uF
3216
3314J 10k
VR1
U5
PL-IRM1261-C438
25V10uF
C5
ISP
CN2
dout
vcc
sclk
din
reset
gnd
B6B-ZR
CN5
FSS-72034-06(2x6)
CN6
FSS-72034-08(2x8)
+5V
CN1
MJ-179
OSG50805C GREEN
DS3
OSB50805C BLUE
DS1
THDP07-060CB
S3
U6
ATmega328P-AU
U1
DS3234S
SMTU1220
BA1
U2 TD62783AFG
U4 TD62783AFG
U3 TD62783AFG
U10
74HC238D
U9
74HC238D
U7
BD6211
S1
S2
DS2
OSR50805C RED
iv27 clock drive 30
2018/04/23 Taishi New
2018/05/28 Taishi modify *1 36 Ohm -> 5.1 Ohm