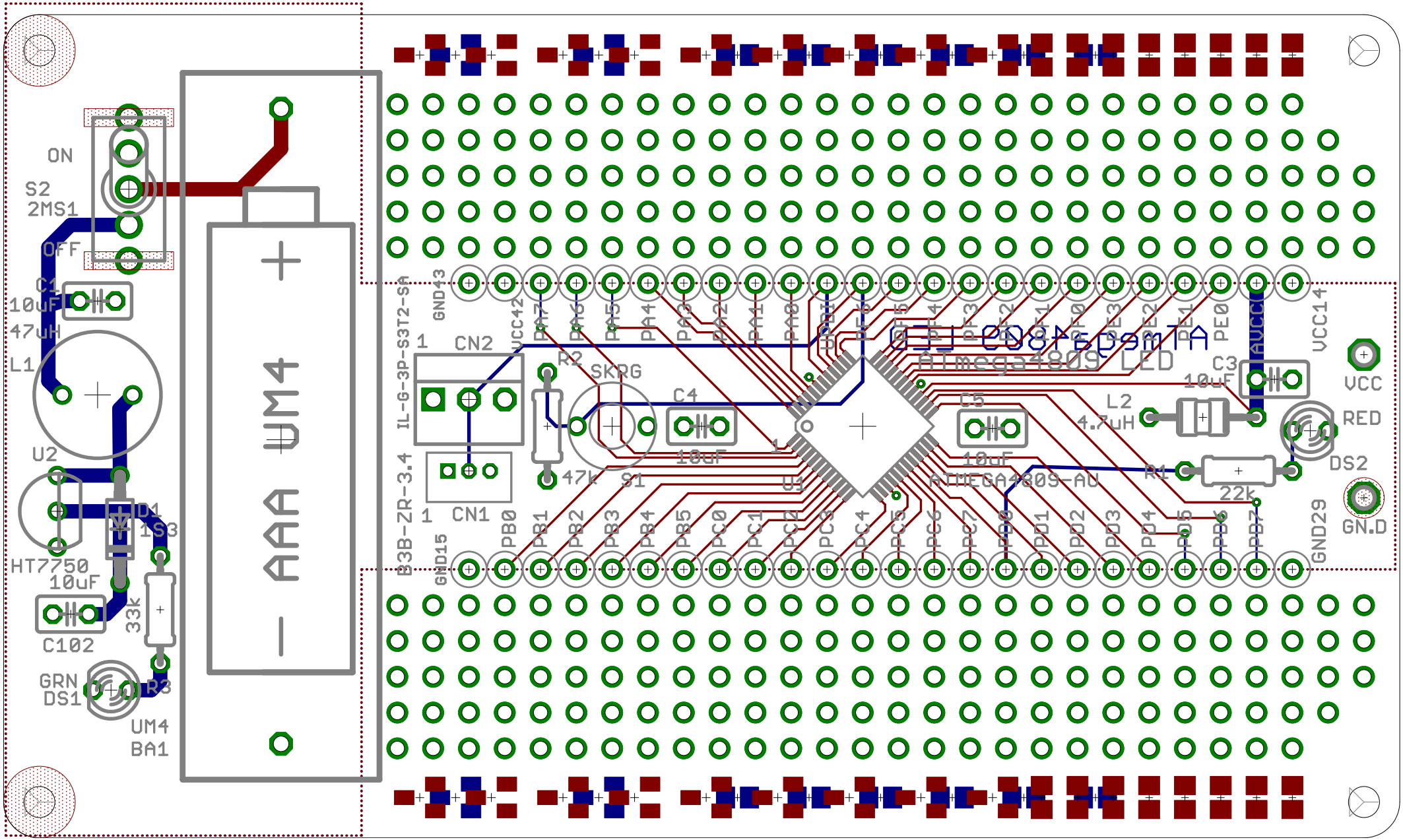
ON
S2
2MS1
OFF
C1
10uF
47uH
L1
U2
HT7750
10uF
C102
D1
1S3
33k
R3
GRN
DS1
UM4
BA1
AAA UM4
IL-G-3P-S3T2-SA
B3B-ZR-3.4
CN2
CN1
R2
SKRG
47k
S1
C4
10uF
U1
ATMEGA4809-AU
C5
10uF
L2
4.7uH
R1
22k
C3
10uF
VCC
RED
DS2
GN.D
VCC14
GND29
GND43
GND15
VCC42
PB0
PB1
PB2
PB3
PB4
PB5
PC0
PC1
PC2
PC3
PC4
PC5
PC6
PC7
PD0
PD1
PD2
PD3
PD4
PD5
PD6
PD7
PE0
PE1
PE2
PE3
PF0
PF1
PF2
PF3
PF4
PF5
PF6
PA0
PA1
PA2
PA3
PA4
PA5
PA6
PA7
ATmega4809 LED