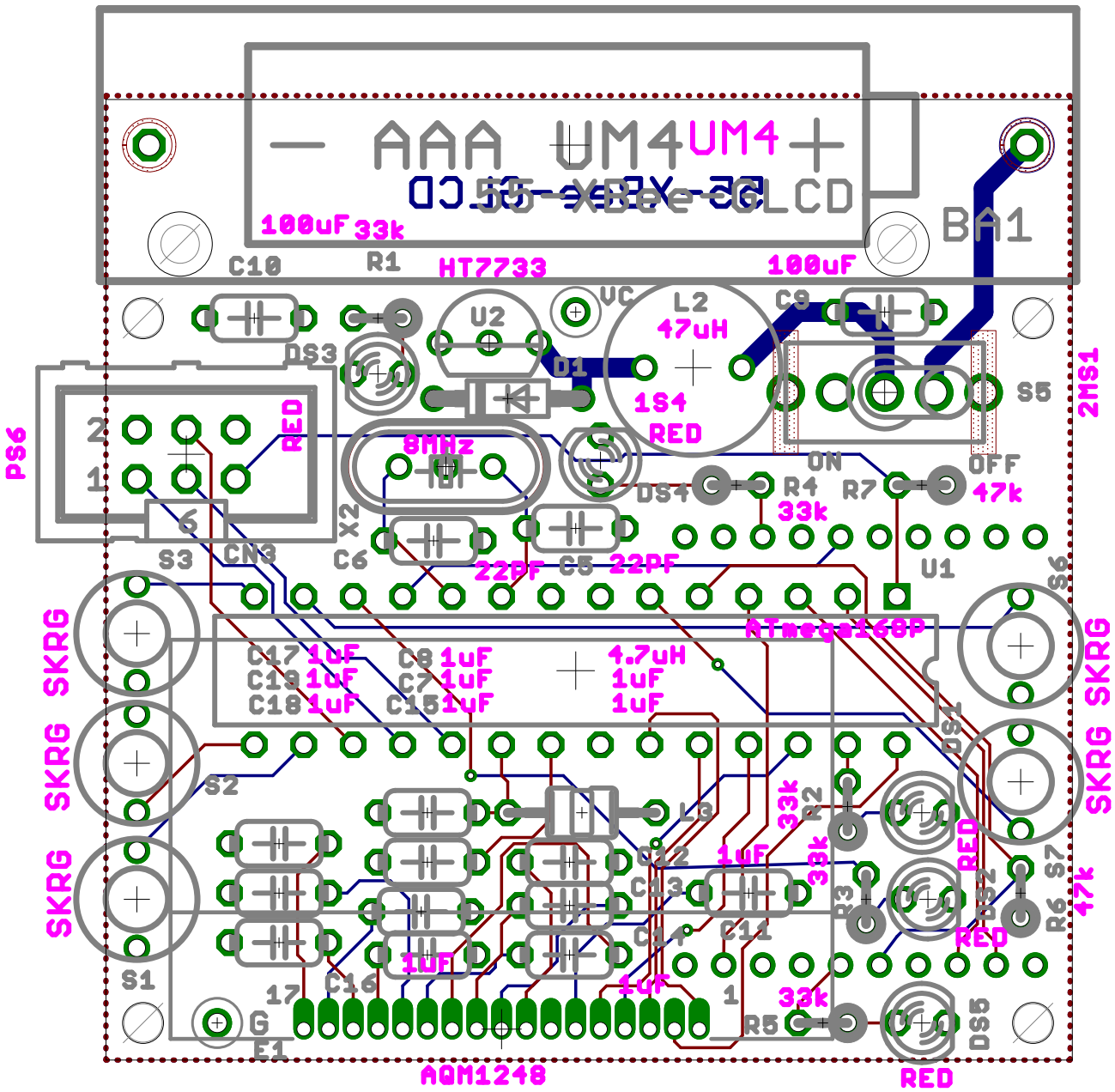
AAA UM4
UM4
BA1
100uF
33k
C10
R1
HT7733
U2
VC
L2
47uH
C9
100uF
DS3
D1
1S4
RED
S5
2HS1
PS6
RED
8MHz
X2
DS4
R4
33k
R7
ON
OFF
47k
S3
CN3
C6
22PF
C5
22PF
U1
S6
ATmega168P
SKRG
SKRG
SKRG
SKRG
SKRG
SKRG
C17 1uF
C19 1uF
C18 1uF
C8 1uF
C7 1uF
C15 1uF
4.7uH
1uF
1uF
DS1
S2
L3
33k
R2
C12
1uF
33k
R3
DS2
RED
RED
S7
R6
47k
C13
C14
C11
1uF
1uF
S1
17
C16
1
33k
R5
DS5
G
E1
AQM1248
RED