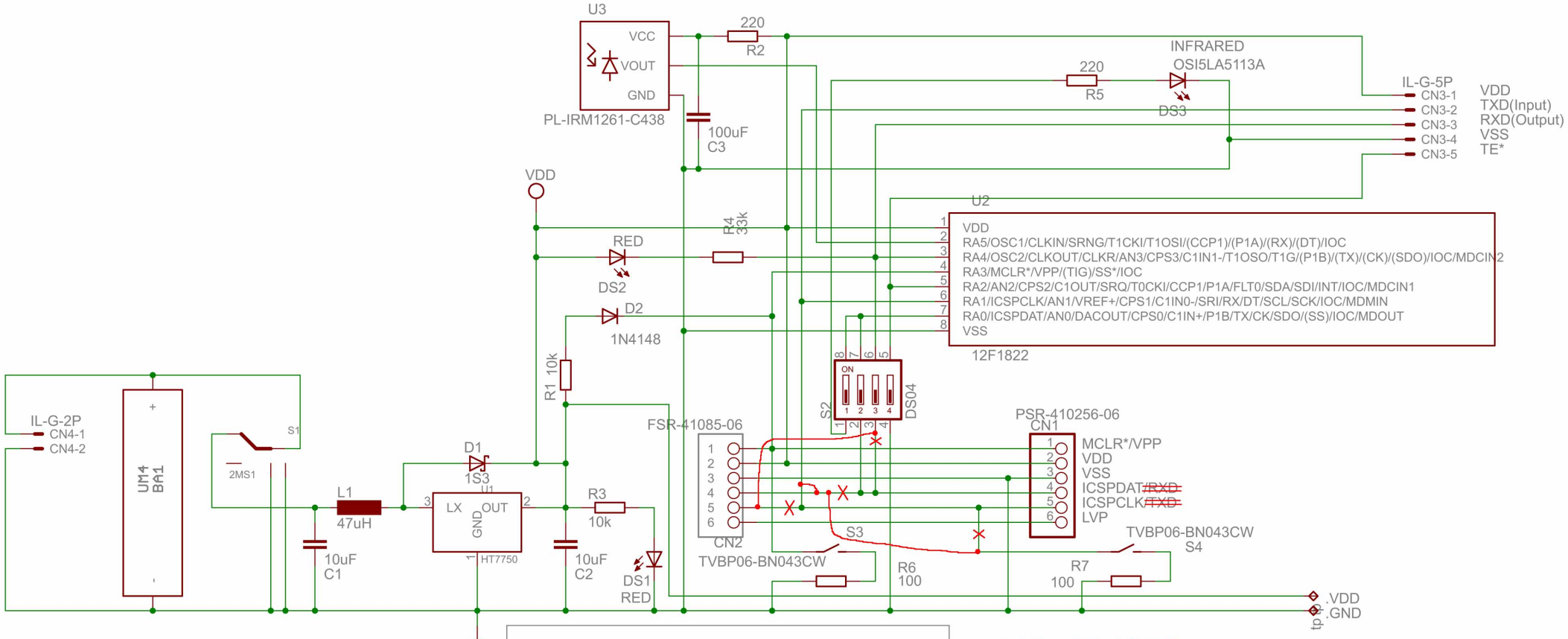

This is Old Version
New Version is [Five_Square_12F1822_IR_seri2]

Five_Square_12F1822_IR_serial

2015/02/12 Taishi

DipSwitch	ICSP	Transmit	Recieve
1	OFF	ON	ON
2	ON	OFF	OFF
3	OFF	ON	ON
4	OFF	ON	OFF

赤色修正部分は基板修正
（カット＆ジャンパー）