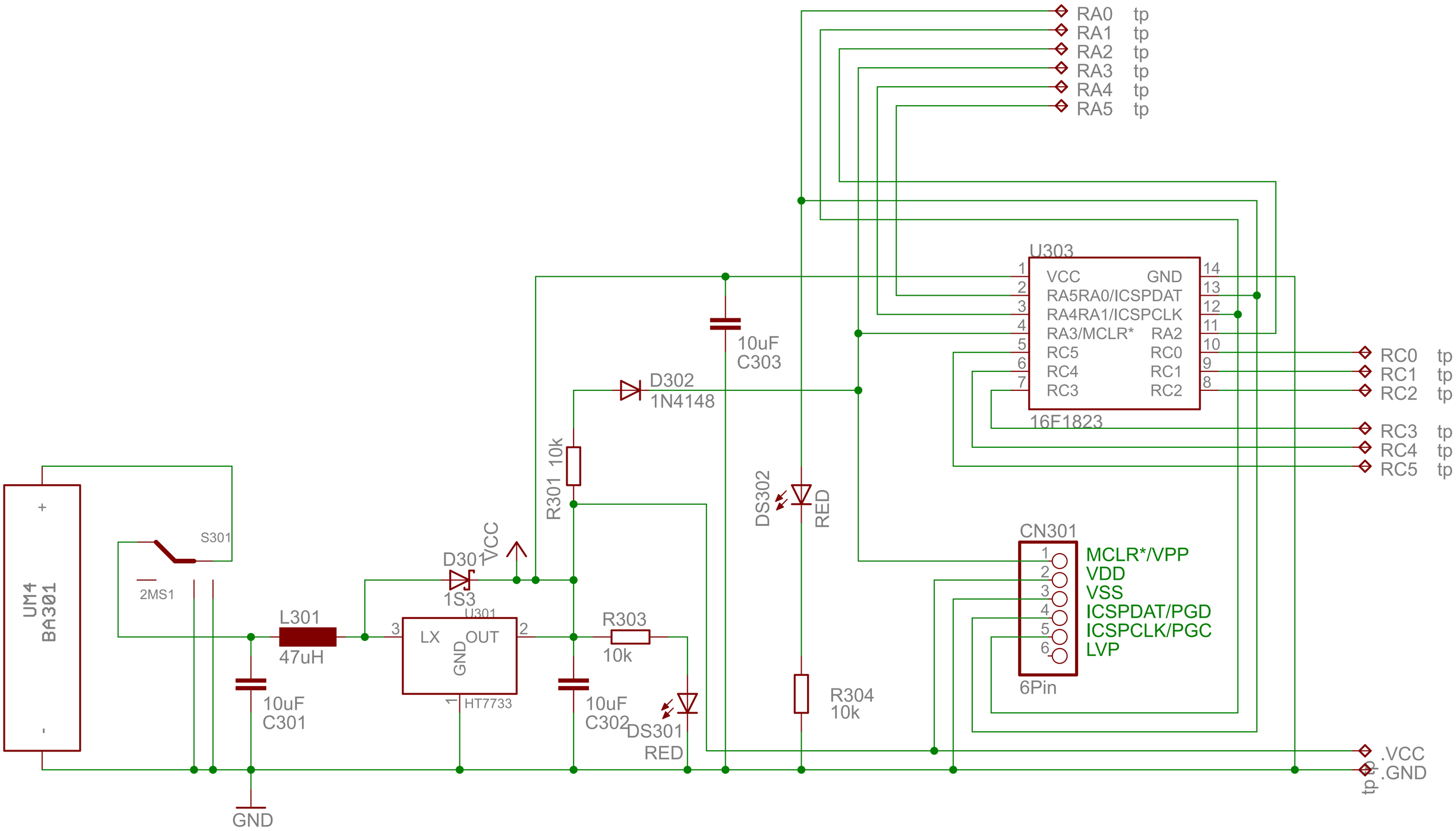

Five_Square_16F1823_LED

2013/09/05 Taishi