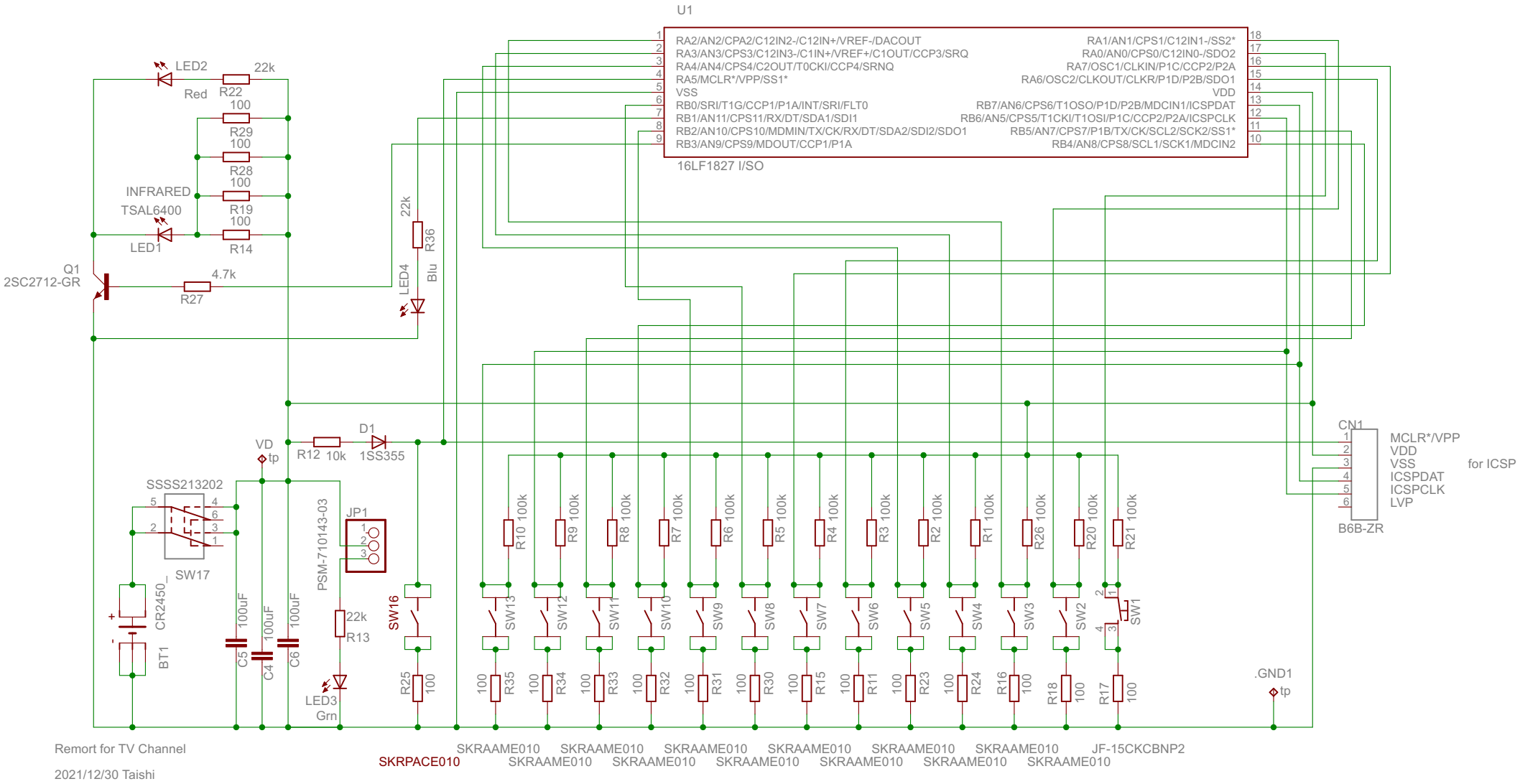
U1
RA2/AN2/CPA2/C12IN2-/C12IN+/VREF-/DACOUT
RA3/AN3/CPS3/C12IN3-/C1IN+/VREF+/C1OUT/CCP3/SRQ
RA4/AN4/CPS4/C2OUT/T0CKI/CCP4/SRNQ
RA5/MCLR*/VPP/SS1*
VSS
RB0/SRI/T1G/CCP1/P1A/INT/SRI/FLT0
RB1/AN11/CPS11/RX/DT/SDA1/SDI1
RB2/AN10/CPS10/MDMIN/TX/CK/RX/DT/SDA2/SDI2/SDO1
RB3/AN9/CPS9/MDOUT/CCP1/P1A
RA1/AN1/CPS1/C12IN1-/SS2*
RA0/AN0/CPS0/C12IN0-/SDO2
RA7/OSC1/CLKIN/P1C/CCP2/P2A
RA6/OSC2/CLKOUT/CLKR/P1D/P2B/SDO1
VDD
RB7/AN6/CPS6/T1OSO/P1D/P2B/MDCIN1/ICSPDAT
RB6/AN5/CPS5/T1CKI/T1OSI/P1C/CCP2/P2A/ICSPCLK
RB5/AN7/CPS7/P1B/TX/CK/SCL2/SCK2/SS1*
RB4/AN8/CPS8/SCL1/SCK1/MDCIN2
16LF1827 I/SO
LED2
Red
R22
22k
R29
100
R28
100
INFRARED
TSAL6400
LED1
R19
100
R14
100
Q1
2SC2712-GR
R27
4.7k
LED4
Blu
R36
22k
VD
tp
R12
10k
D1
1SS355
SSSS213202
SW17
CR2450_
BT1
C5
100uF
C4
100uF
C6
100uF
PSM-710143-03
JP1
R13
22k
LED3
Grn
SW16
R25
100
R10 100k
R9 100k
R8 100k
R7 100k
R6 100k
R5 100k
R4 100k
R3 100k
R2 100k
R1 100k
R26 100k
R20 100k
R21 100k
SW13
SW12
SW11
SW10
SW9
SW8
SW7
SW6
SW5
SW4
SW3
SW2
SW1
R35
R34
R33
R32
R31
R30
R15
R11
R23
R24
R16
R18
R17
CN1
MCLR*/VPP
VDD
VSS
ICSPDAT
ICSPCLK
LVP
for ICSP
B6B-ZR
.GND1
tp
Remort for TV Channel
2021/12/30 Taishi
SKRPACE010
SKRAAME010
JF-15CKCBNP2