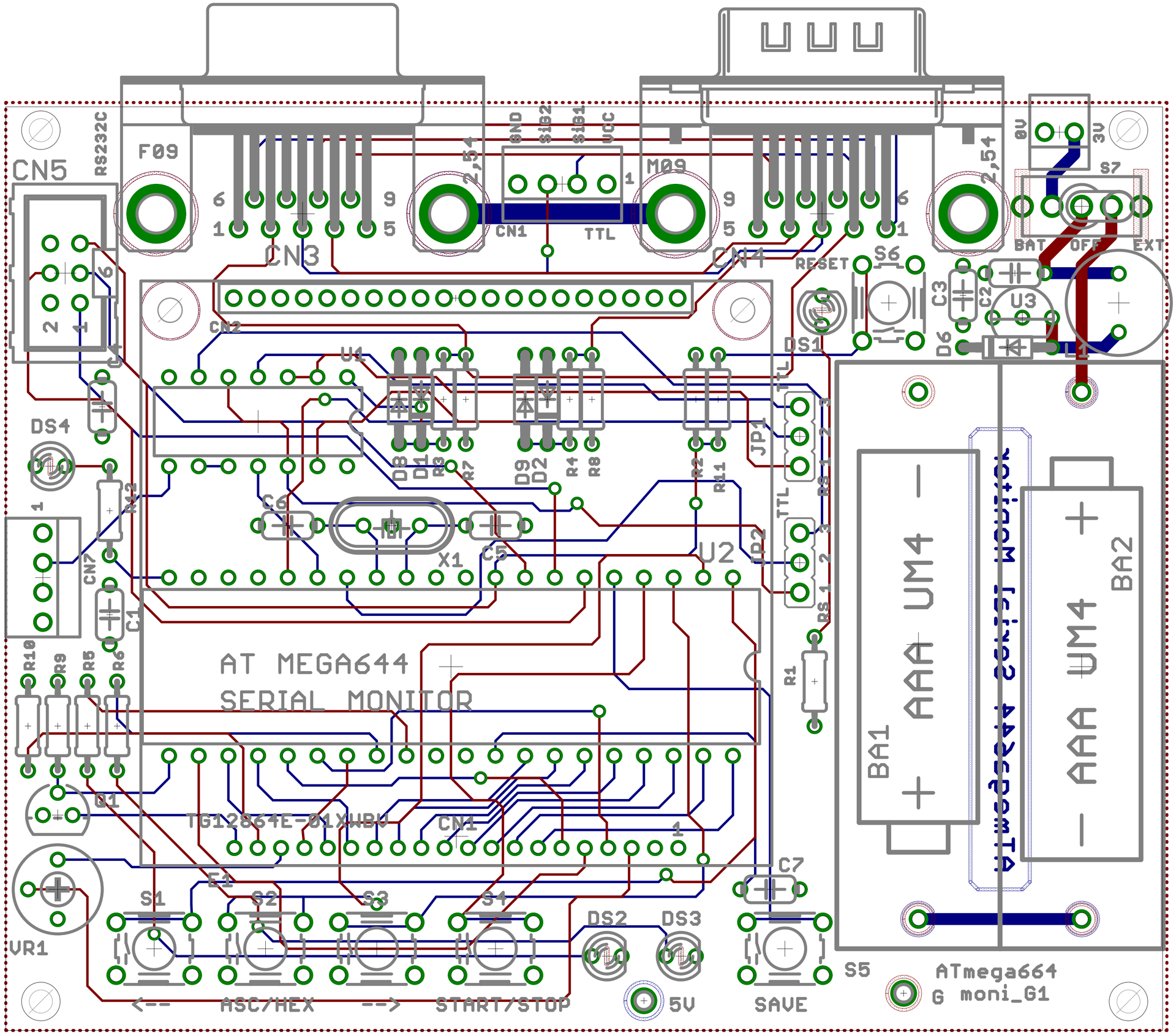


AT MEGA644
SERIAL MONITOR