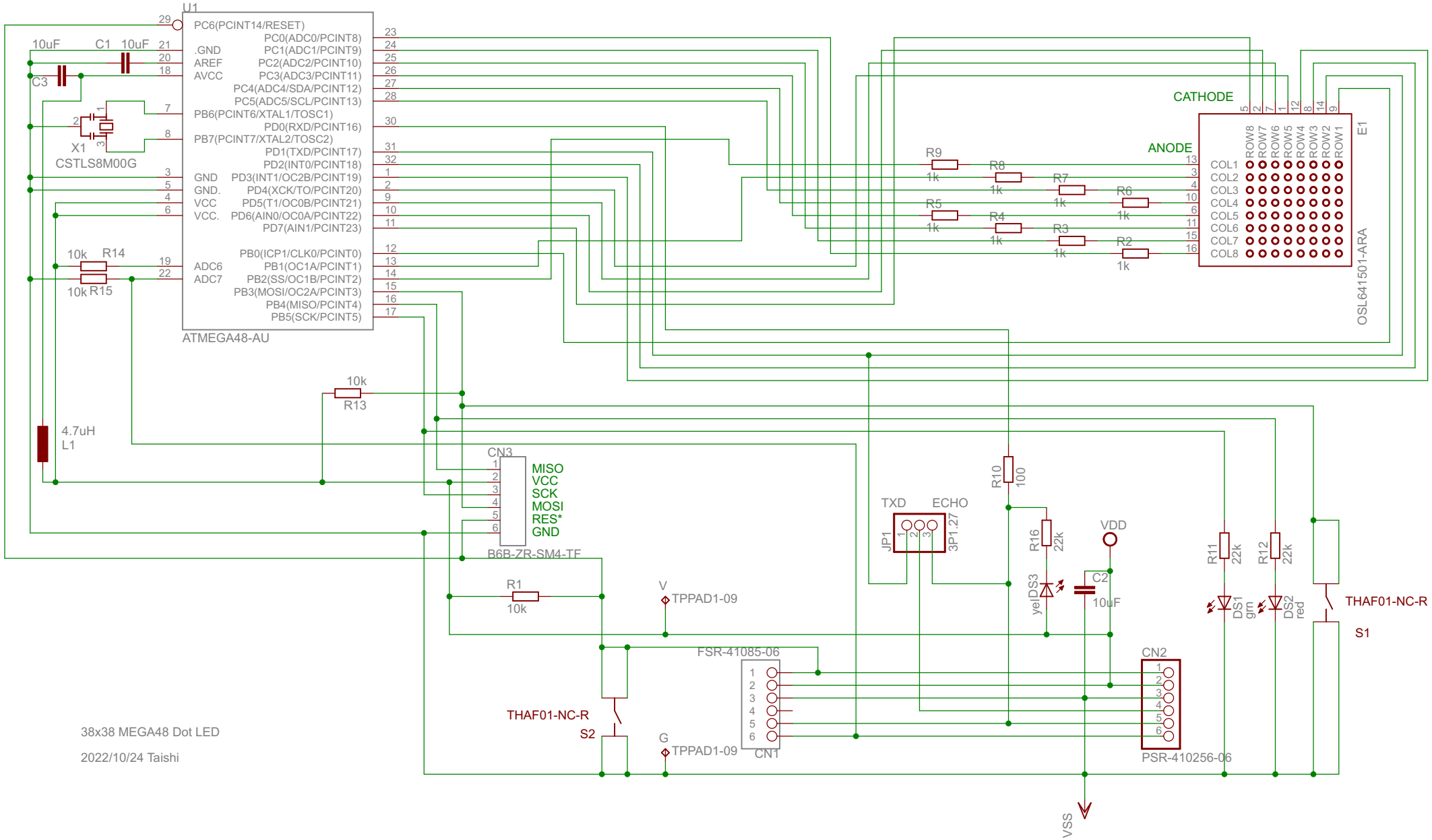
U1
PC6(PCINT14/RESET)
PC0(ADC0/PCINT8)
PC1(ADC1/PCINT9)
PC2(ADC2/PCINT10)
PC3(ADC3/PCINT11)
PC4(ADC4/SDA/PCINT12)
PC5(ADC5/SCL/PCINT13)
PB6(PCINT6/XTAL1/TOSC1)
PD0(RXD/PCINT16)
PB7(PCINT7/XTAL2/TOSC2)
PD1(TXD/PCINT17)
PD2(INT0/PCINT18)
PD3(INT1/OC2B/PCINT19)
PD4(XCK/TO/PCINT20)
PD5(T1/OC0B/PCINT21)
PD6(AIN0/OC0A/PCINT22)
PD7(AIN1/PCINT23)
PB0(ICP1/CLK0/PCINT0)
PB1(OC1A/PCINT1)
PB2(SS/OC1B/PCINT2)
PB3(MOSI/OC2A/PCINT3)
PB4(MISO/PCINT4)
PB5(SCK/PCINT5)
.GND
AREF
AVCC
GND
GND.
VCC
VCC.
ADC6
ADC7
ATMEGA48-AU
10uF
C1
10uF
C3
X1
CSTLS8M00G
10k
R14
10k
R15
10k
R13
4.7uH
L1
CN3
MISO
VCC
SCK
MOSI
RES*
GND
B6B-ZR-SM4-TF
R1
10k
V
TPPAD1-09
FSR-41085-06
THAF01-NC-R
S2
G
TPPAD1-09
CN1
CATHODE
ANODE
ROW8
ROW7
ROW6
ROW5
ROW4
ROW3
ROW2
ROW1
COL1
COL2
COL3
COL4
COL5
COL6
COL7
COL8
E1
OSL641501-ARA
R9
1k
R8
1k
R7
1k
R6
1k
R5
1k
R4
1k
R3
1k
R2
1k
R10
100
TXD
ECHO
JP1
3P1.27
R16
22k
VDD
C2
10uF
yelDS3
R11
22k
R12
22k
DS1
grn
DS2
red
THAF01-NC-R
S1
CN2
PSR-410256-06
VSS
38x38 MEGA48 Dot LED
2022/10/24 Taishi