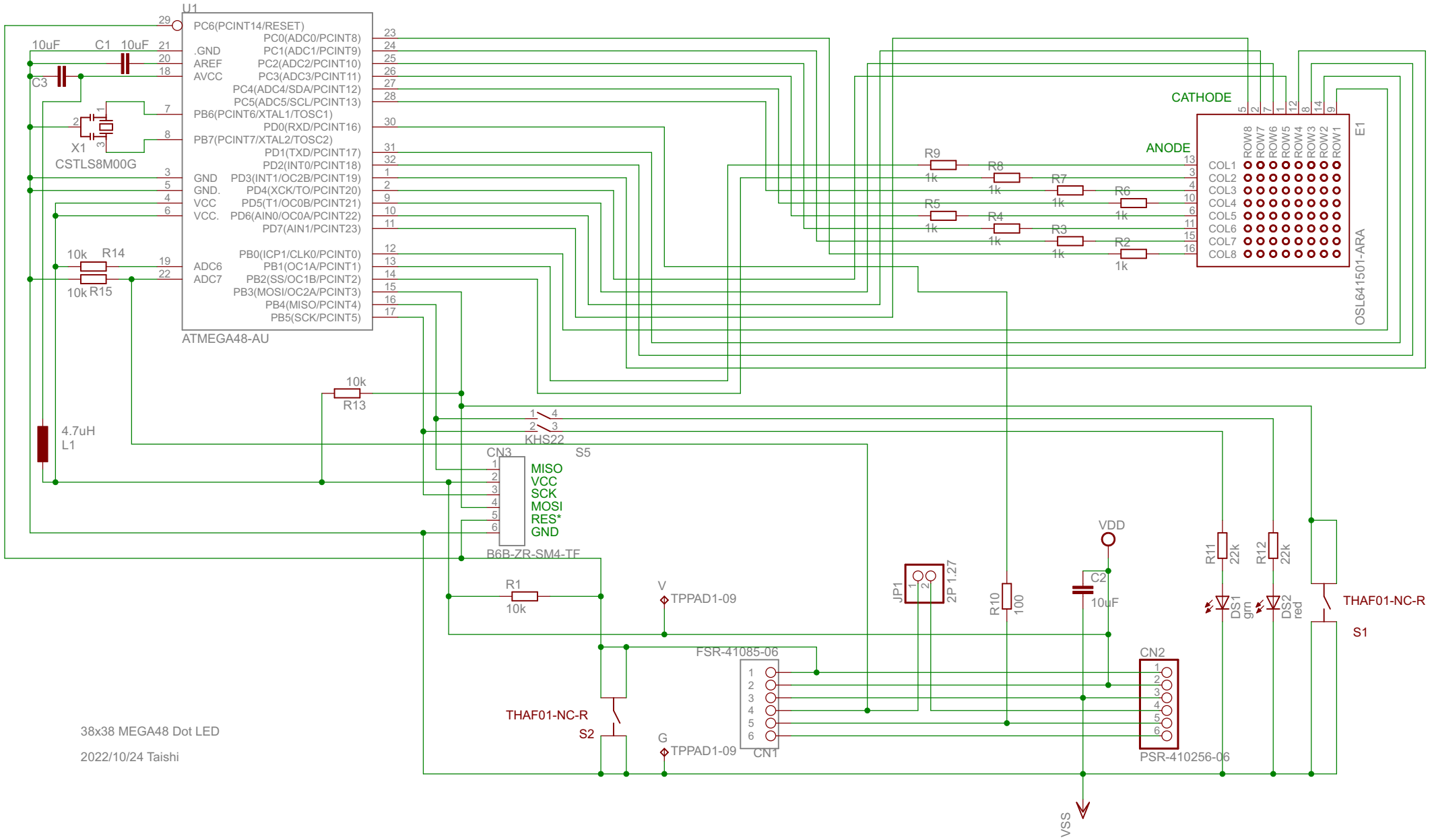
U1
PC6(PCINT14/RESET)
PC0(ADC0/PCINT8)
.GND
PC1(ADC1/PCINT9)
AREF
PC2(ADC2/PCINT10)
AVCC
PC3(ADC3/PCINT11)
PC4(ADC4/SDA/PCINT12)
PC5(ADC5/SCL/PCINT13)
PB6(PCINT6/XTAL1/TOSC1)
PD0(RXD/PCINT16)
PB7(PCINT7/XTAL2/TOSC2)
PD1(TXD/PCINT17)
PD2(INT0/PCINT18)
GND
PD3(INT1/OC2B/PCINT19)
GND.
PD4(XCK/TO/PCINT20)
VCC
PD5(T1/OC0B/PCINT21)
VCC.
PD6(AIN0/OC0A/PCINT22)
PD7(AIN1/PCINT23)
PB0(ICP1/CLK0/PCINT0)
ADC6
PB1(OC1A/PCINT1)
ADC7
PB2(SS/OC1B/PCINT2)
PB3(MOSI/OC2A/PCINT3)
PB4(MISO/PCINT4)
PB5(SCK/PCINT5)
ATMEGA48-AU
10uF
C1
10uF
C3
X1
CSTLS8M00G
10k
R14
10k
R15
4.7uH
L1
10k
R13
KHS22
S5
CN3
MISO
VCC
SCK
MOSI
RES*
GND
B6B-ZR-SM4-TF
R1
10k
V
TPPAD1-09
THAF01-NC-R
S2
G
TPPAD1-09
FSR-41085-06
CN1
JP1
2P 1.27
R10
100
VDD
C2
10uF
VSS
CN2
PSR-410256-06
R11
22k
R12
22k
DS1
grn
DS2
red
THAF01-NC-R
S1
CATHODE
ANODE
ROW8
ROW7
ROW6
ROW5
ROW4
ROW3
ROW2
ROW1
COL1
COL2
COL3
COL4
COL5
COL6
COL7
COL8
E1
OSL641501-ARA
R9
1k
R8
1k
R7
1k
R6
1k
R5
1k
R4
1k
R3
1k
R2
1k
38x38 MEGA48 Dot LED
2022/10/24 Taishi