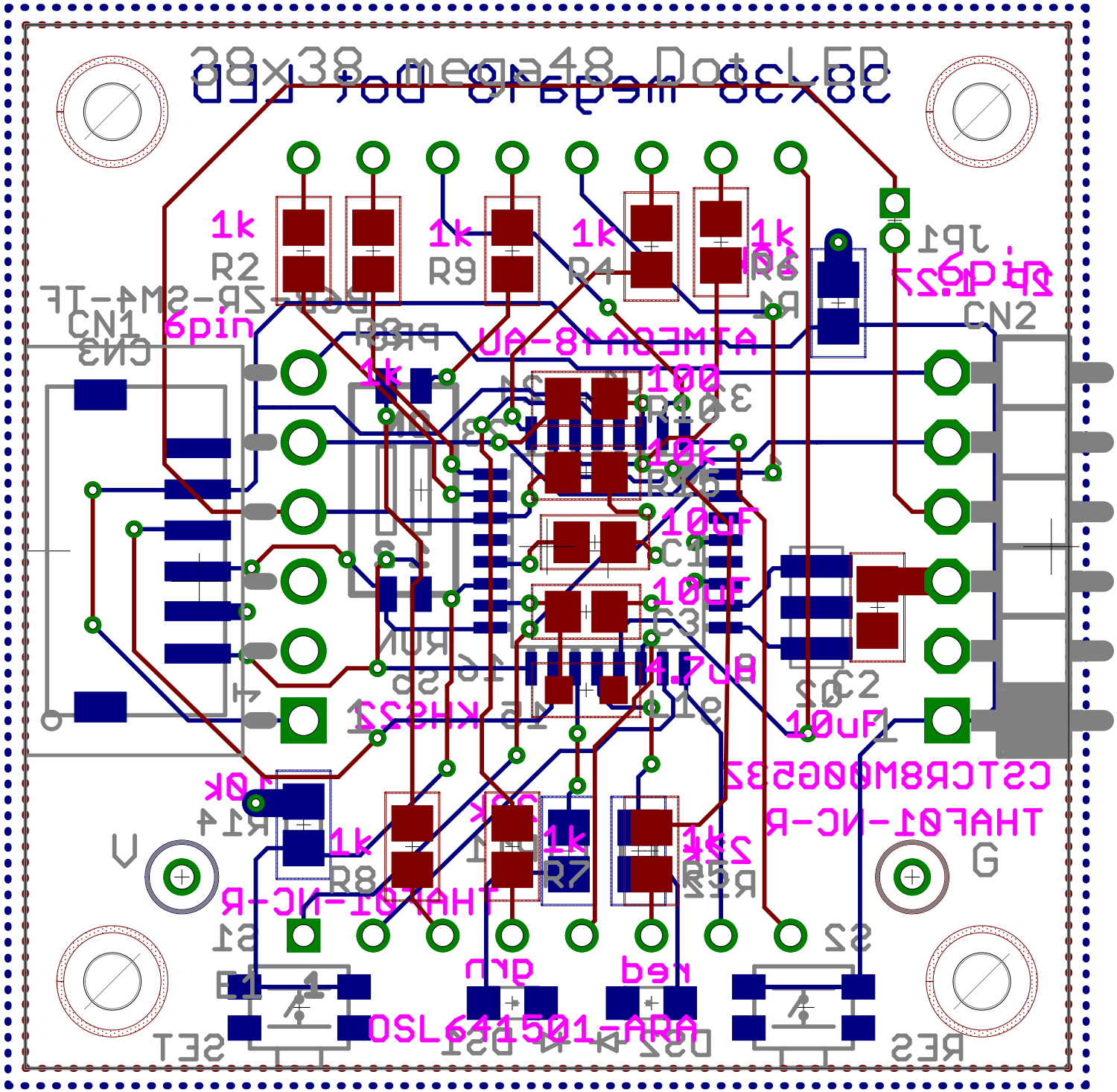
38x38 mega48 Dot LED
1k
R2
1k
R9
1k
R4
1k
R6
6pin
CN1
CN2
1k
R3
ATMEGA48-AU
100
R10
10k
R15
10uF
C1
10uF
C3
4.7uF
C2
10uF
CSTCR8M00G53Z
THAF01-NC-R
10k
R14
1k
R8
1k
R7
1k
R5
V
G
THAF01-NC-R
OSL641501-ARA