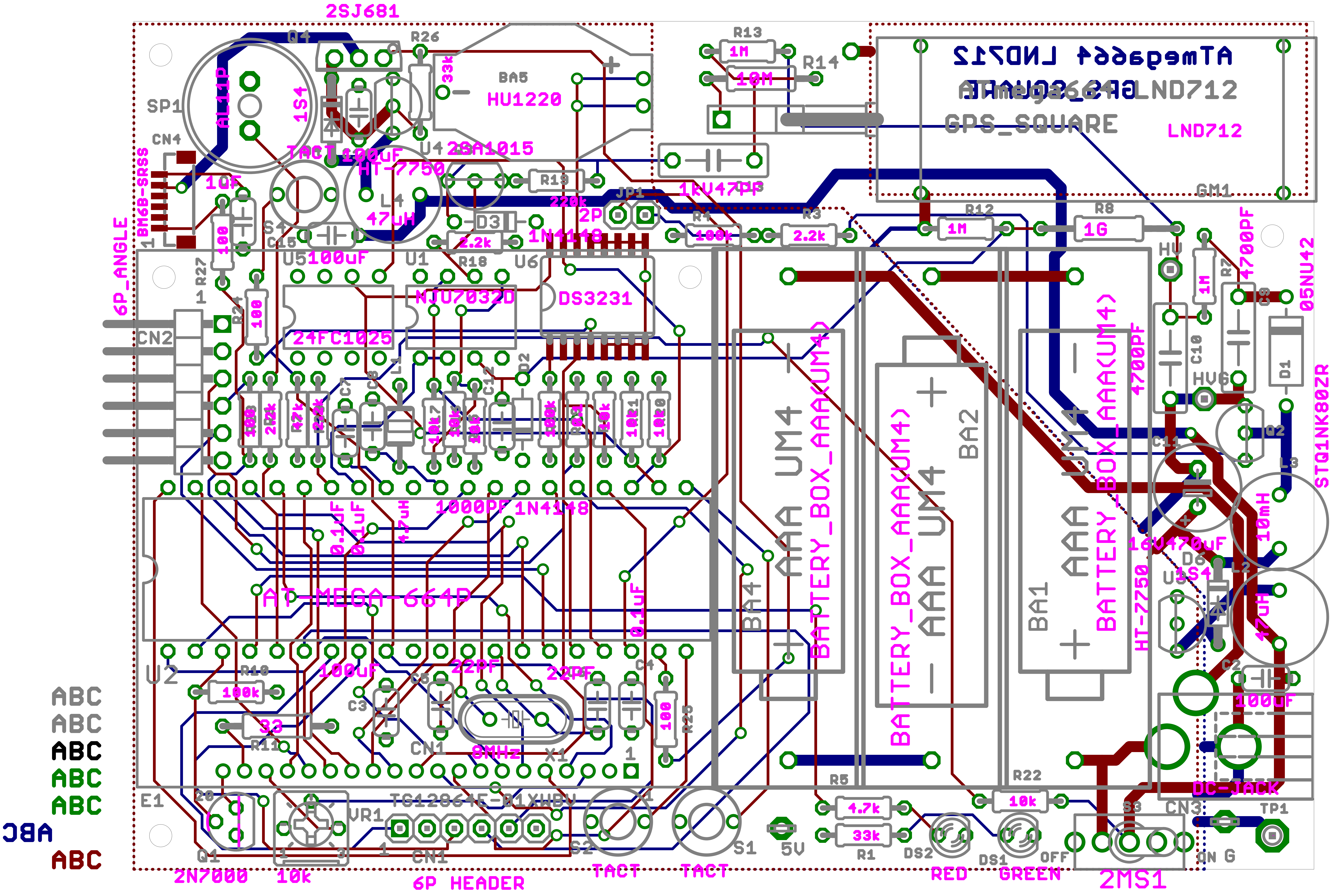
2SJ681
Q4
R26
33k
BA5
HU1220
SP1
AL11P
1S4
CN4
BM6B-SRSS
TACT
100uF
HT-7750
U4
2SA1015
R19
220k
1uF
100
L4
47uH
D3
1N4148
2.2k
S4
C15
U5
U1
R18
U6
6P_ANGLE
R27
R24
CN2
NJU7032D
DS3231
24FC1025
R13
1M
R14
10M
1kV47PF
JP1
2P
R4
100k
R3
ATmega664 LND712
ATmega664 LND712
GPS_SQUARE
LND712
GM1
R12
R8
1G
HV
R7
4700PF
C9
05NU42
C10
HVG
D1
Q2
STQ1NK80ZR
C11
L3
10mH
16V470uF
D6
U3
L2
47uH
C2
100uF
DC-JACK
CN3
TP1
ON G
BATTERY_BOX_AAA(UM4)
AAA UM4
BA4
BA2
BA1
1000PF
0.1uF
4.7uH
AT-MEGA-664P
U2
R10
100k
33
R11
C3
C5
22PF
8MHz
X1
CN1
C4
R25
E1
Q1
2N7000
VR1
10k
TG12864E-01XWBV
6P HEADER
S2
S1
TACT
5V
R5
4.7k
33k
R1
DS2
RED
DS1
GREEN
R22
OFF
S3
2MS1
ABC