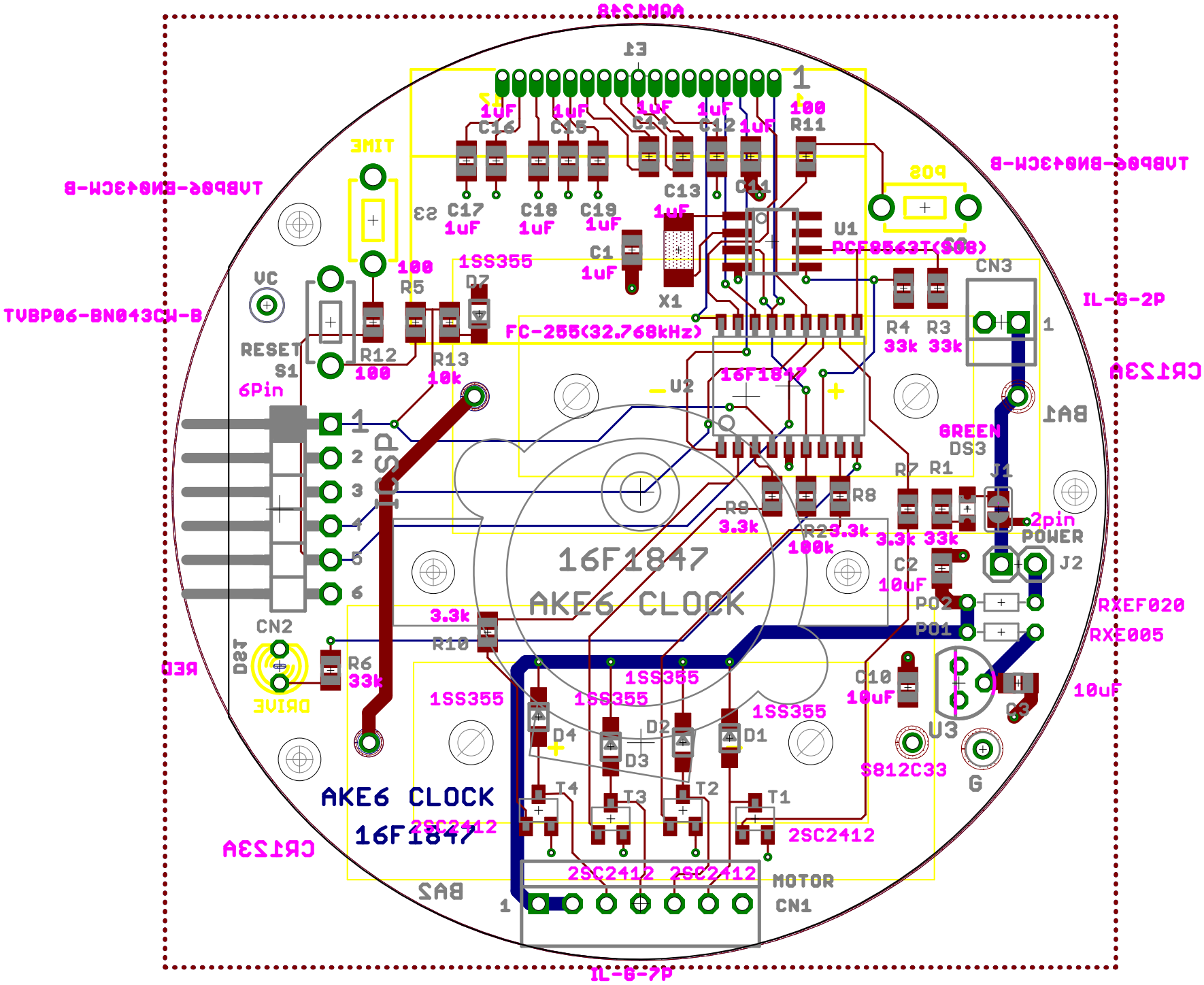

16F1847
AKE6 CLOCK
AKE6 CLOCK
16F1847
TVBP06-BN043CW-B
IL-G-2P
IL-G-7P
CR123A
CR123A
RXEF020
RXE005
10uF
2pin
POWER
GREEN
DS3
PCF8563T(SO8)
FC-255(32.768kHz)
16F1847
1SS355
2SC2412
MOTOR
CN1
CN2
CN3
U1
U2
U3
X1
S812C33
6Pin
RESET
S1
VC
TIME
POS
DRIVE
RED