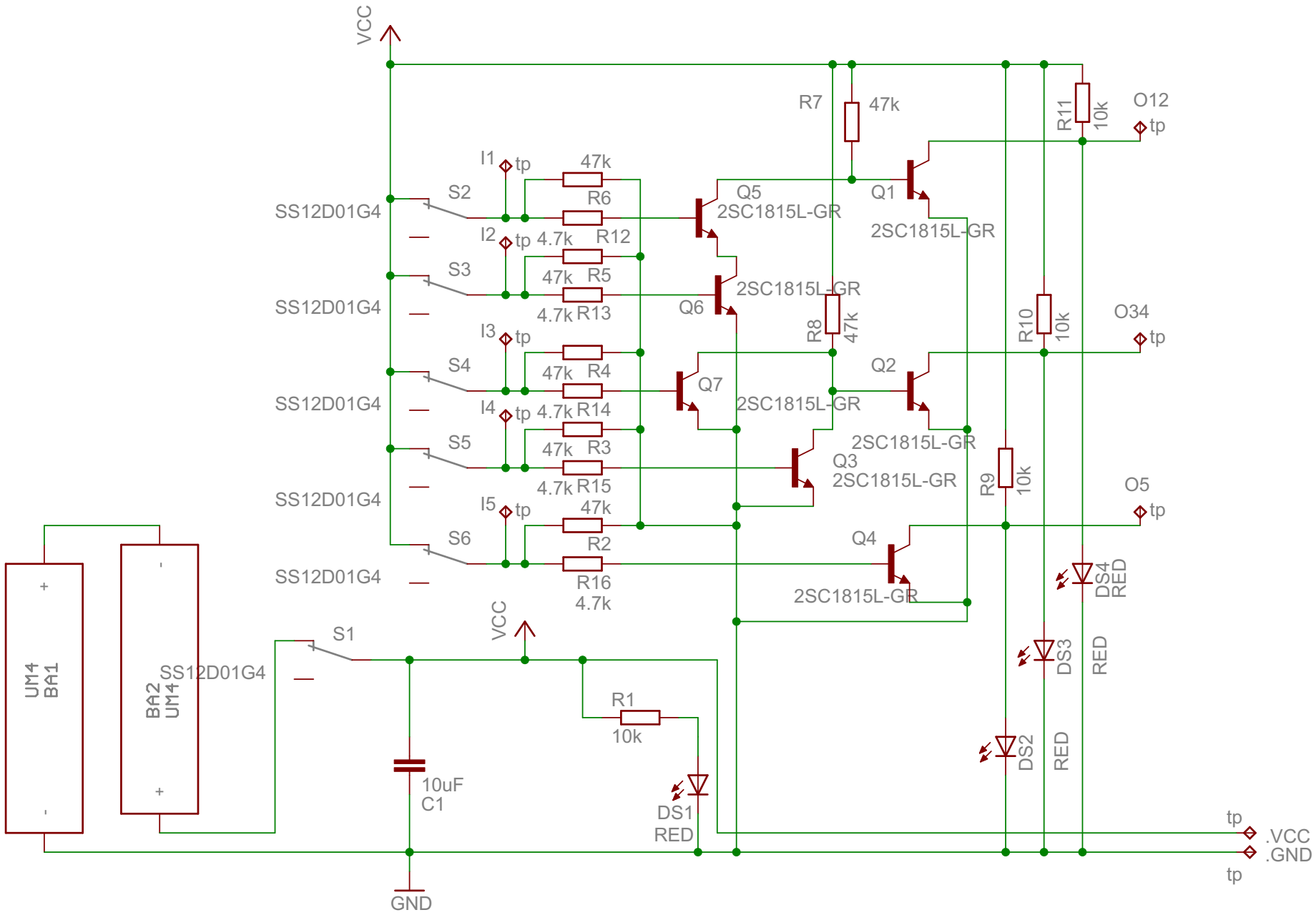

Five_Square_AND_OR_NOT

2014/02/26 Taishi