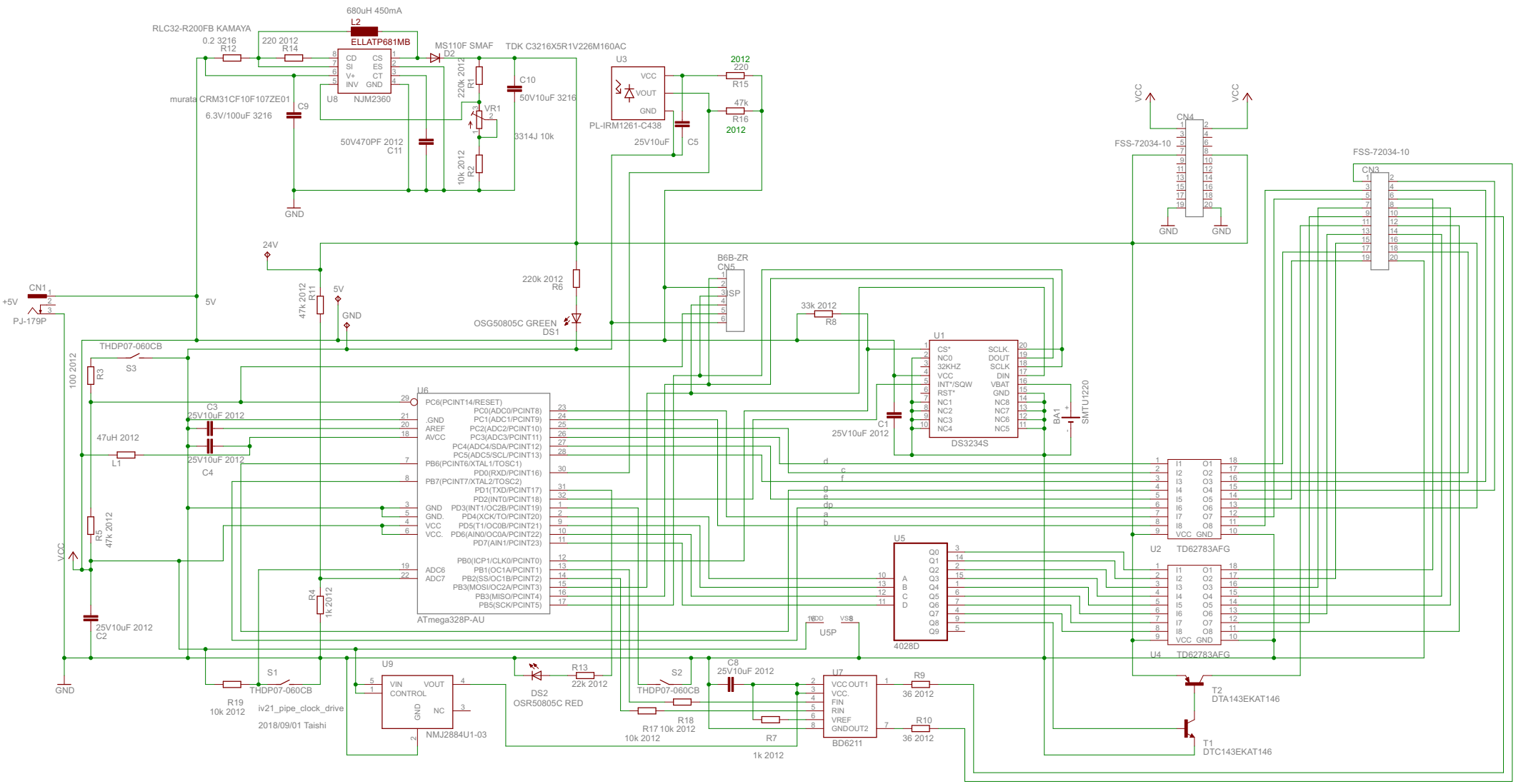
680uH 450mA
L2
ELLATP681MB
RLC32-R200FB KAMAYA
0.2 3216
R12
220 2012
R14
CD CS
SI ES
V+ CT
INV GND
U8 NJM2360
MS110F SMAF
D2
TDK C3216X5R1V226M160AC
220k 2012
R1
C10
50V10uF 3216
VR1
3314J 10k
10k 2012
R2
murata CRM31CF10F107ZE01
6.3V/100uF 3216
C9
50V470PF 2012
C11
GND
U3
VCC
VOUT
GND
PL-IRM1261-C438
25V10uF
C5
2012
220
R15
47k
R16
2012
VCC
VCC
CN4
FSS-72034-10
GND
GND
FSS-72034-10
CN3
24V
B6B-ZR
CN5
ISP
220k 2012
R6
OSG50805C GREEN
DS1
33k 2012
R8
CN1
+5V
PJ-179P
5V
47k 2012
R11
5V
GND
THDP07-060CB
S3
100 2012
R3
C3
25V10uF 2012
47uH 2012
L1
25V10uF 2012
C4
U6
PC6(PCINT14/RESET)
PC0(ADC0/PCINT8)
PC1(ADC1/PCINT9)
PC2(ADC2/PCINT10)
PC3(ADC3/PCINT11)
PC4(ADC4/SDA/PCINT12)
PC5(ADC5/SCL/PCINT13)
PB6(PCINT6/XTAL1/TOSC1)
PD0(RXD/PCINT16)
PB7(PCINT7/XTAL2/TOSC2)
PD1(TXD/PCINT17)
PD2(INT0/PCINT18)
PD3(INT1/OC2B/PCINT19)
PD4(XCK/TO/PCINT20)
PD5(T1/OC0B/PCINT21)
PD6(AIN0/OC0A/PCINT22)
PD7(AIN1/PCINT23)
PB0(ICP1/CLK0/PCINT0)
PB1(OC1A/PCINT1)
PB2(SS/OC1B/PCINT2)
PB3(MOSI/OC2A/PCINT3)
PB3(MISO/PCINT4)
PB5(SCK/PCINT5)
.GND
AREF
AVCC
GND
GND.
VCC
VCC.
ADC6
ADC7
ATmega328P-AU
U1
CS*
NC0
32KHZ
VCC
INT*/SQW
RST*
NC1
NC2
NC3
NC4
SCLK.
DOUT
SCLK
DIN
VBAT
GND
NC8
NC7
NC6
NC5
DS3234S
C1
25V10uF 2012
BA1
SMTU1220
d
c
f
g
e
dp
a
b
U5
A
B
C
D
Q0
Q1
Q2
Q3
Q4
Q5
Q6
Q7
Q8
Q9
4028D
U5P
VDD
VSS
U2 TD62783AFG
U4 TD62783AFG
I1 O1
I2 O2
I3 O3
I4 O4
I5 O5
I6 O6
I7 O7
I8 O8
VCC GND
R4
1k 2012
25V10uF 2012
C2
GND
R19
10k 2012
S1
THDP07-060CB
iv21_pipe_clock_drive
2018/09/01 Taishi
U9
VIN
CONTROL
VOUT
GND
NC
NMJ2884U1-03
DS2
OSR50805C RED
R13
22k 2012
S2
THDP07-060CB
C8
25V10uF 2012
R18
R17 10k 2012
10k 2012
R7
1k 2012
U7
VCC OUT1
VCC.
FIN
RIN
VREF
GNDOUT2
BD6211
R9
36 2012
R10
36 2012
T2
DTA143EKAT146
T1
DTC143EKAT146

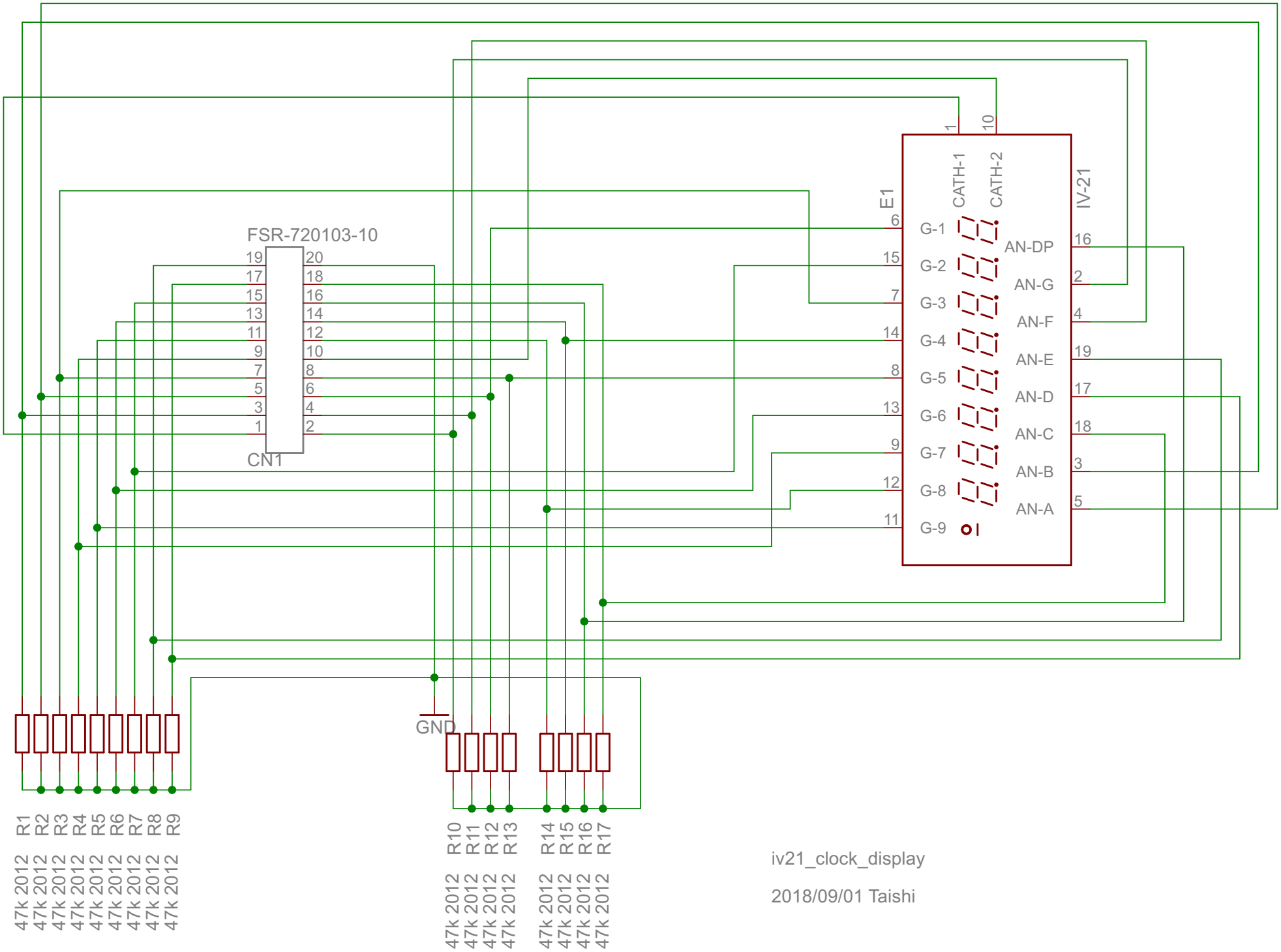

iv21_clock_display

2018/09/01 Taishi