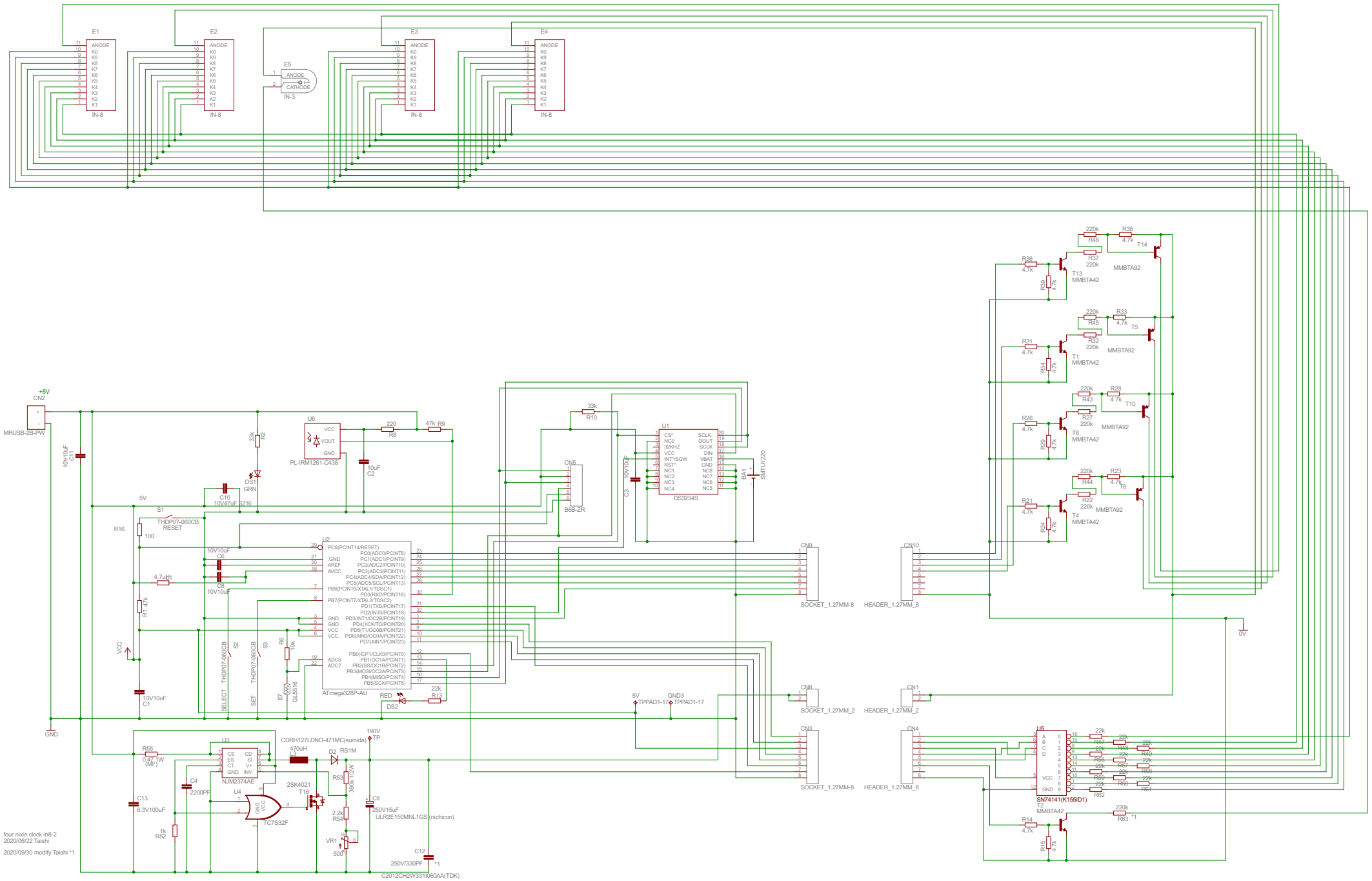

four nixie clock in8-2
2020/06/22 Taishi

2020/09/30 modify Taishi *1